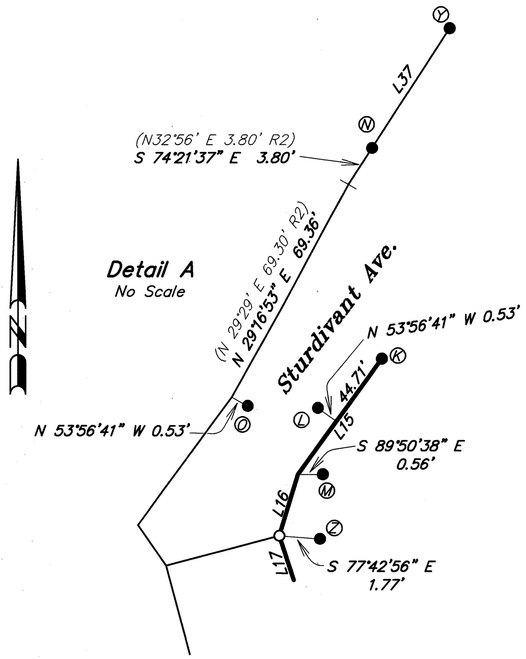

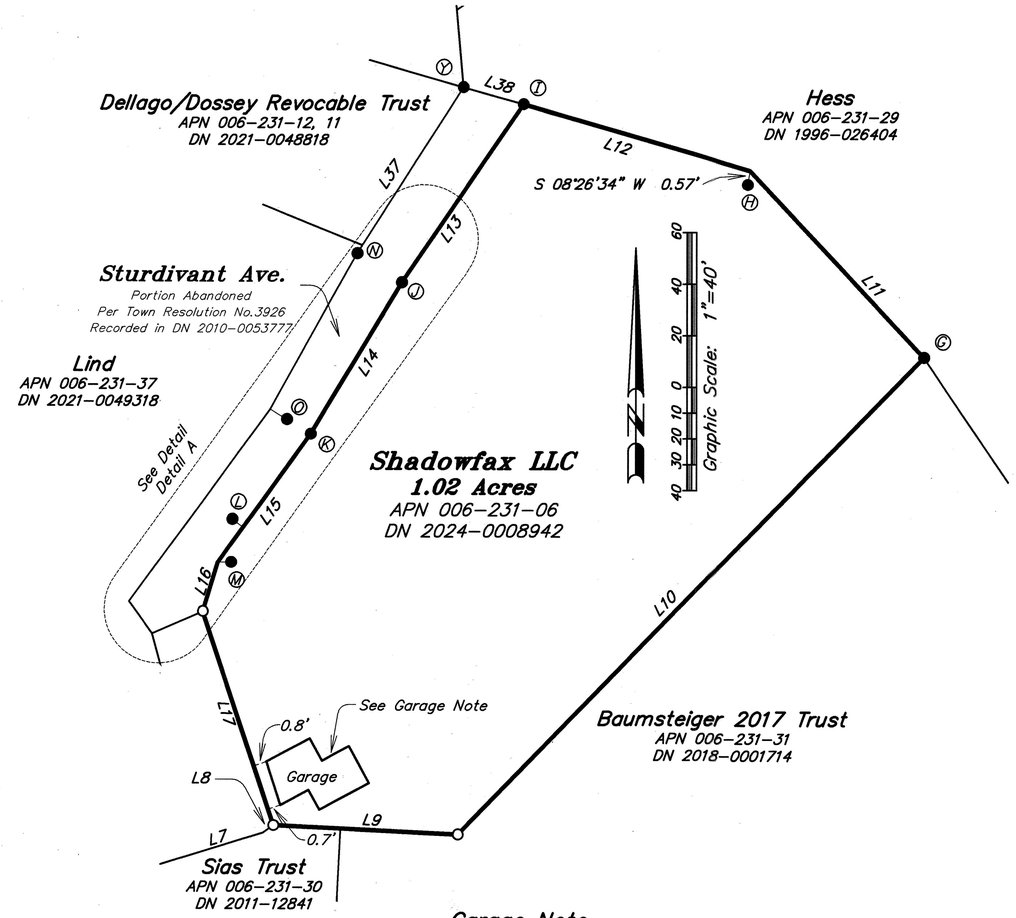

Garage Note

All angles of garage were built at 90° except for the angles at the westerly face of the garage, which appears to have been deliberately built out of square in order to parallel "Line 17", supporting the reconstructed position of the POB (D1), the position of "Line 17" and harmony in the neighborhood.

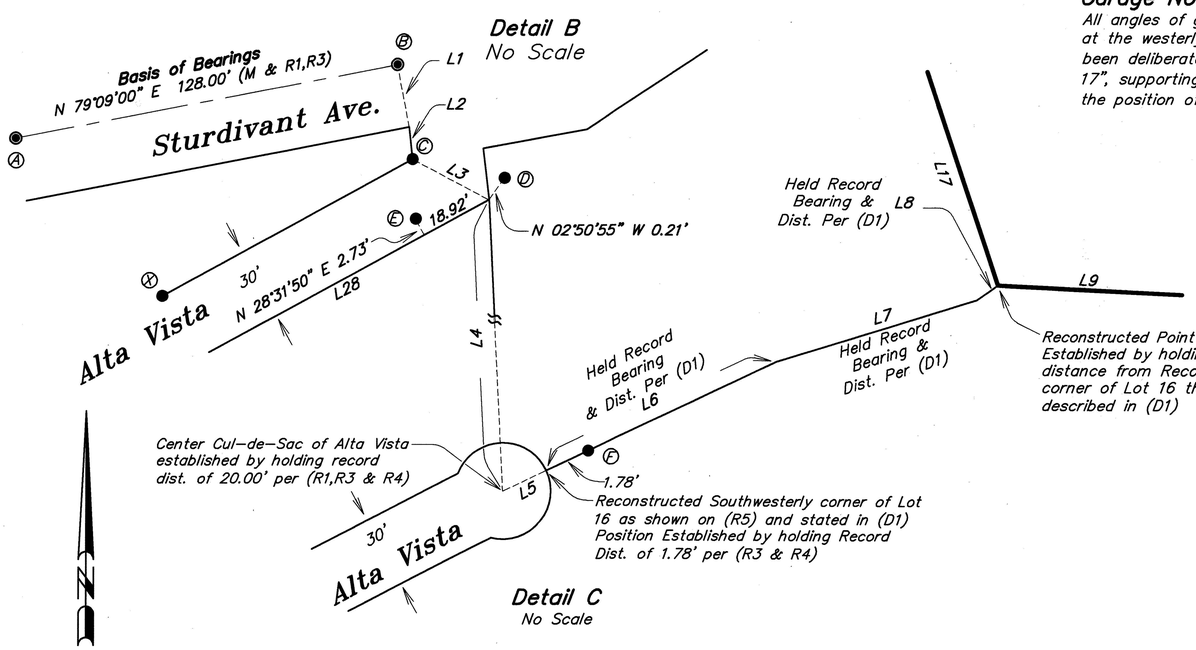

Legend:

- ● Found Monument As Noted
- ◉ Found Centerline Monument as Noted
- ○ Set 3/4" Iron Pipe, Yellow Plastic Plug PLS 7901

M & (R) Measured and Record
OR/DN Official Records/Document Number
Distances Are Shown In Feet & Decimals Thereof
Ties are perpendicular and/or radial, unless otherwise noted.

Boundary Resolution Notes

–The Basis of bearings between centerline monuments on Strudivant Ave. was chosen to match the basis of bearings used in (R5) the Subject deed (D1) being a portion of lot 16 as shown on (R5)

–The Southwesterly corner of Lot 16 as shown on (R5) stated in (D1) was reconstructed by holding record distance of 1.78' from Monument (F) as shown on (R3 & R4) further substantiated by the found Monuments along the right of way of Alta Vista.

–The center of the Cul-de-Sac of Alta Vista was established by holding the record radius distance of 20.00' per (R1, R3 & R4) from the reconstructed Southwesterly corner of Lot 16 as stated in (D1). A compass rule adjustment was applied between the found Monument (S) and the easterly end of "Line 18" to delineate the Right of way of Alta Vista.

–The Point of Beginning (POB) of (D1) was established by holding record bearing and distance from the Reconstructed Southwesterly corner of Lot 16 through Lines 6, 7, 8, as described in (D1)

–"Line 9 and Line 10" of (D1) were established by holding Monument (G) and the Reconstructed position of the POB of (D1) and applying a compass rule adjustment.

–"LIne 11 and Line 12 of (D1) were established by holding and accepting Monument (G) and Monument (I) while holding Record angle of 149°15'00" between the respective lines per (D1). Monument (H) was found near the angle point of "LIne 11" and "Line 12" but was not accepted as marking the corner due to being of inconsistent character from the rest of the found monuments during the course of this survey.

–Monuments (J) and (K) held and accepted as marking the northerly angle point of (D1)

–Record angle of 185°02'00" was held at Monument (K) between "Line 14" and "Line 15" per (D1) Record Distance was held for "Line 15" Per (D1)

–Record Angle of 161°00'00" was held between "line 15" and Line 16" Record Distance was held for "Line 16" Per (D1)

–"Line 17" was established by connecting the end of "Line 16" with the Point of Beginning of Per the deed call of (D1)

–Based on the inspection of the Found Monuments around our subject parcel and the mathematical relationship between them, it is clear that these were set by a qualified Land Surveyor, and therefor acceptance of those Monuments was prudent to maintain harmony with our subject parcel and adjoiners. Furthermore the Subject parcel deed (D1) did not close by 1.72 feet

Record of Survey

Being The Lands Of Shadowfax LLC As Described By Deed Recorded Under Document Number 2024-0008942, Marin County Records; Being A Portion Of Rancho Punta de Quentin.

Town of San Anselmo, County of Marin, State of California

Area: 1.02 Acres
Date: February, 2025
Scale: 1"=40'

adobe associates, inc.
civil engineering | land surveying | wastewater
1220 N. Dutton, Ave., Santa Rosa, Ca. 95401
P (707) 541-2300; F (707) 541-2301

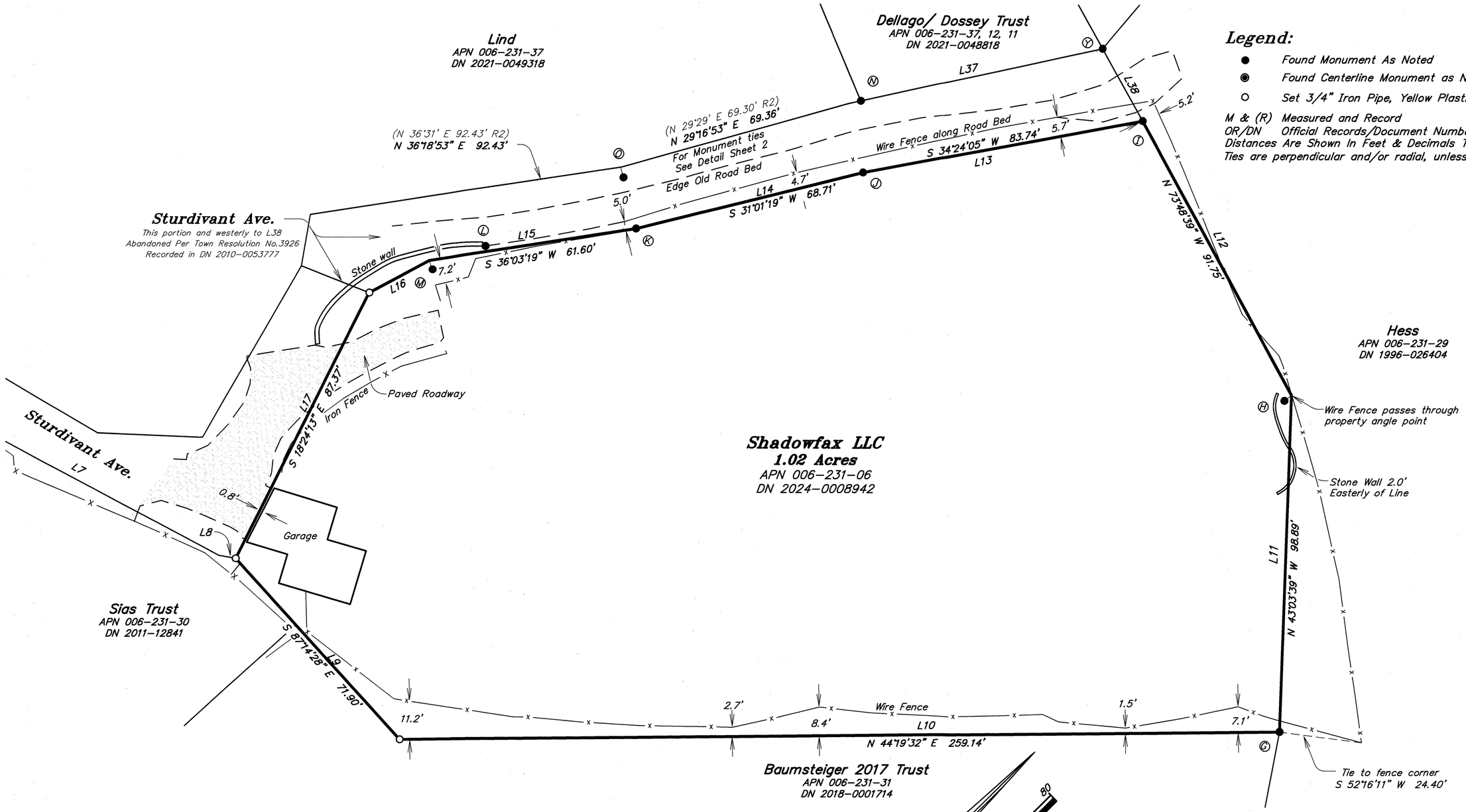

Legend:

- ● Found Monument As Noted
- ◉ Found Centerline Monument as Noted
- ○ Set 3/4" Iron Pipe, Yellow Plastic Plug PLS 7901

M & (R) Measured and Record
OR/DN Official Records/Document Number
Distances Are Shown In Feet & Decimals Thereof
Ties are perpendicular and/or radial, unless otherwise noted.

Line Table

No.	Direction	Length
L7	N 72°51'00" E	112.70' (M & D1,R2,R5)
L8	N 55°02'00" E	5.00' (M & D1,CR2,CR5)
L9	S 87°14'28" E	71.90'
	(S 86°29' E	72.14' D1)
L10	N 44°19'32" E	259.14'
	(N 45°05' E	260' D1)
L11	N 43°03'39" W	98.89'
	(N 42°53' W	98.62' D1)
L12	N 73°48'39" W	91.75'
	(N 73°38' W	91.5' D1)

Line Table

No.	Direction	Length
L13	S 34°24'05" W	83.74'
	(S 34°50' W	83.8' D1)
L14	S 31°01'19" W	68.71'
	(S 31°29' W	68.6' D1)
L15	S 36°03'19" W	61.60'
	(S 36°31' W	61.6' D1)
L16	S 17°03'19" W	19.96'
	(S 17°31' W	19.96' D1)
L17	S 18°24'13" E	87.37'
	(S 17°23' E	86.86' D1)

Line Table

No.	Direction	Length
L37	N 32°37'49" E	72.74'
	(N 32°56' E	73.00' R2)
L38	S 74°21'37" E	24.33'
	(S 73°38' E	24.50' R2)

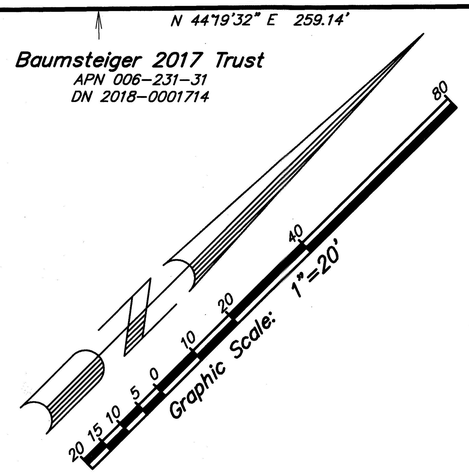

Record of Survey

Being The Lands Of Shadowfax LLC As Described By Deed Recorded Under Document Number 2024-0008942, Marin County Records;
Being A Portion Of Rancho Punta de Quentin.
Town of San Anselmo, County of Marin, State of California

Area: 1.02 Acres
Date: February, 2025
Scale: 1"=20'

adobe associates, inc.
civil engineering | land surveying | wastewater
1220 N. Dutton, Ave., Santa Rosa, Ca. 95401
P (707) 541-2300; F (707) 541-2301